KTET-60-1-WC-F

TRANSFORMER TYPE: Electronic	**INPUT VOLTAGE:** 120VAC ±10%	**WARRANTY:** 3 Years
LAMP CONNECTION: Parallel	**INPUT FREQUENCY:** 50/60 Hz	**POWER FACTOR:** Normal

ELECTRICAL SPECIFICATIONS

LAMP TYPE	INPUT WATTS	INPUT CURRENT (AMPS)	POWER FACTOR	OUTPUT VOLTAGE	WIRING DIAGRAM
12V Halogen Lamps	53	0.45	>0.95	11.00	T1-1

PRODUCT FEATURES

- Minimum Starting Temperature: 0ºF, -18ºC
- Maximum Case Temperature: 167ºF, 75ºC
- Transient Protection Meets ANSI/IEEE C62.41 Cat. A

WIRING DIAGRAMS

T1-1

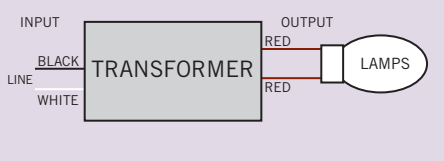

KEYSTONE TECHNOLOGIES, LLC TOLL FREE (800) 464-2680 FAX (215) 628-4412
P.O. Box 246, Ambler, PA 19002 **www.KeystoneBallast.com**

KTET-60-1-WC-F

CASE STYLE/DIMENSIONS

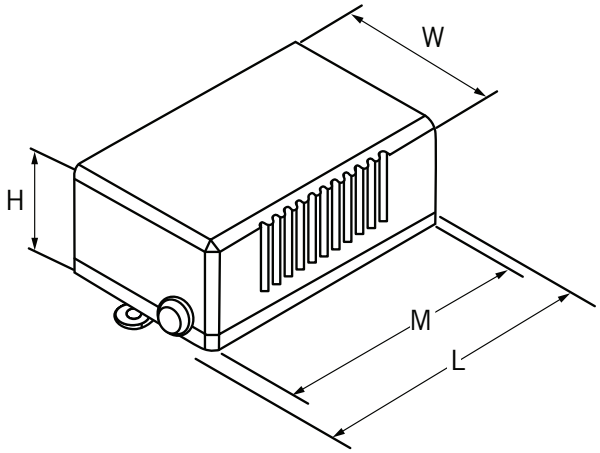

CASE DIMENSIONS

LENGTH: 3.15”
WIDTH: 1.50”
HEIGHT: 1.06”
MOUNTING: 2.80”

STANDARD LEAD LENGTHS*

BLACK: ?????”
WHITE: ?????”
RED: ?????”
CASE MATERIAL: Plastic

*Consult Keystone for special lead length requirements.

HOT SPOT LOCATION

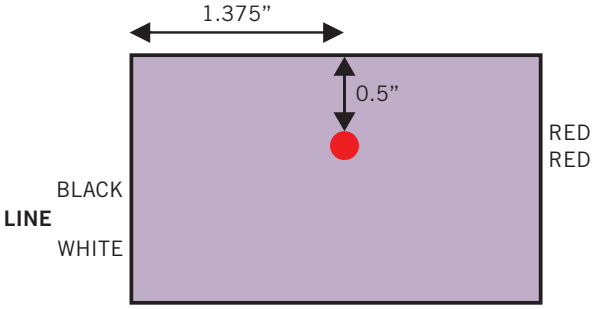

ORDERING INFORMATION

ORDER CODE	PACKAGING STYLE	PACK QTY.	ITEM STATUS

CATALOG NUMBER BREAKDOWN

KTET-60-1-WC-F

- KTET: Keystone Technologies Electronic Transformer
- 60: 60 W Max Input Power
- 1: 120 Volt
- WC: With Cord
- F: Fuse

KEYSTONE TECHNOLOGIES, LLC TOLL FREE (800) 464-2680 FAX (215) 628-4412
P.O. Box 246, Ambler, PA 19002 **www.KeystoneBallast.com**